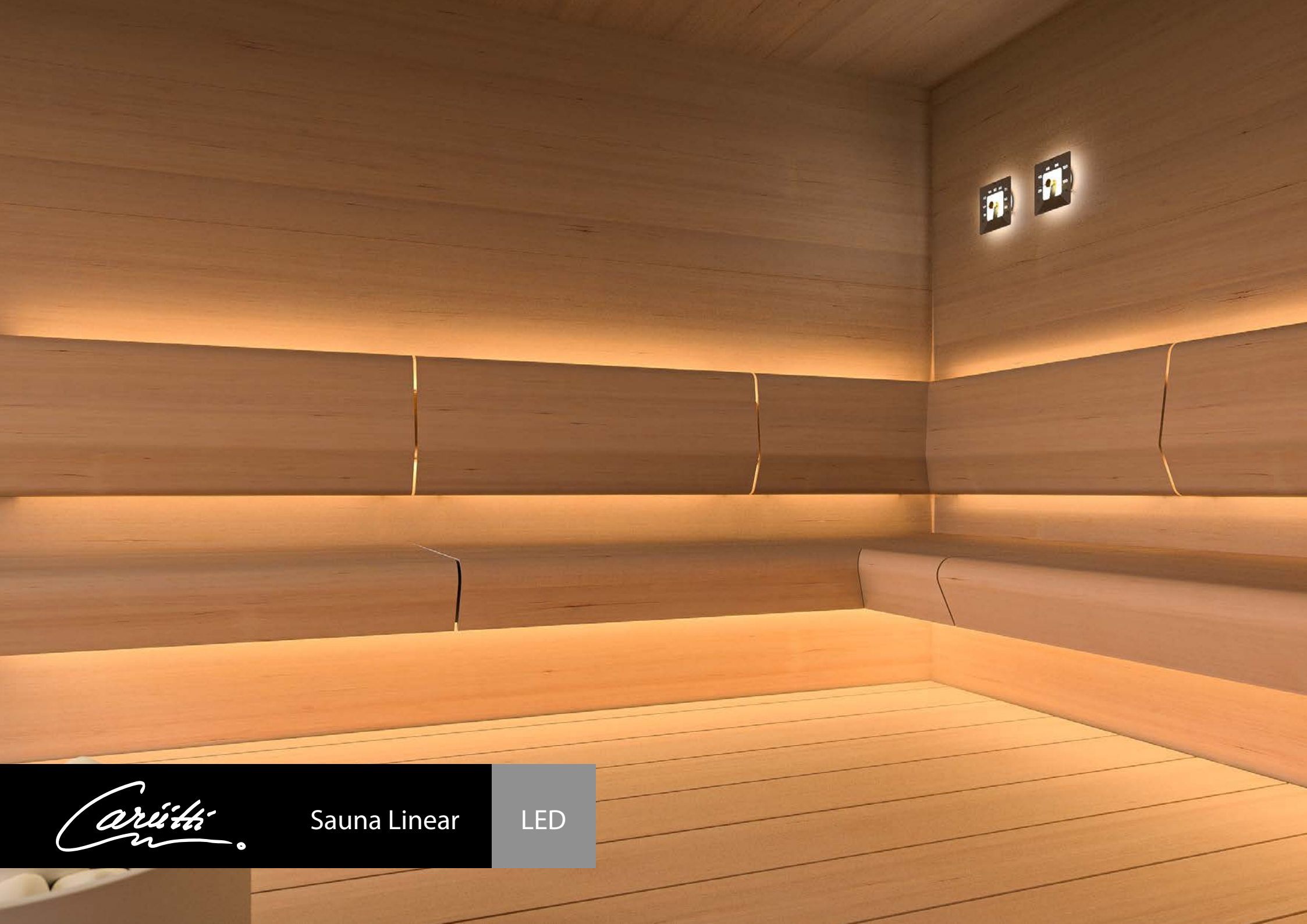

Sauna Linear

LED

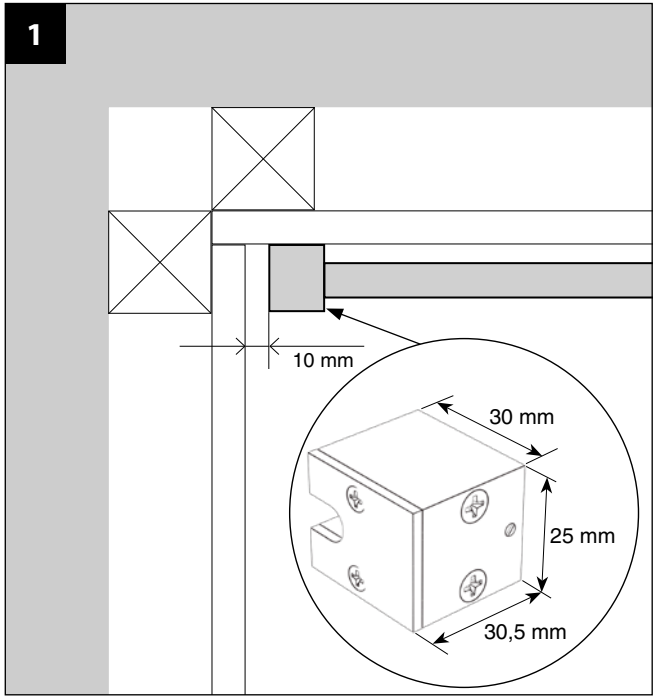
1
10 mm
30 mm
25 mm
30,5 mm

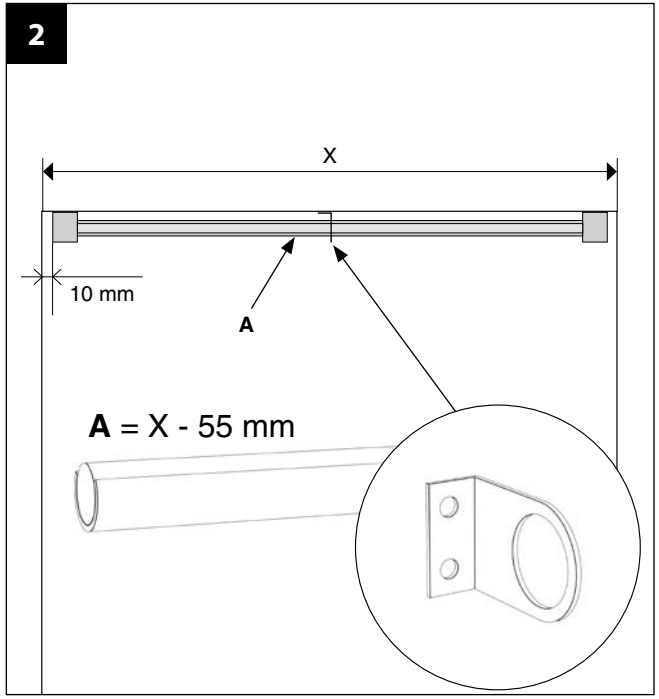
2
X
10 mm
A
A = X - 55 mm

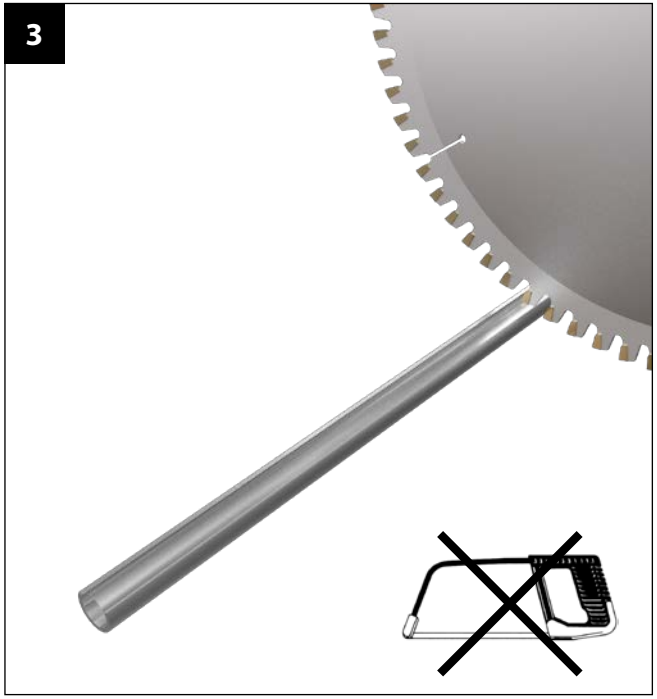
3

4
Max. 150 cm

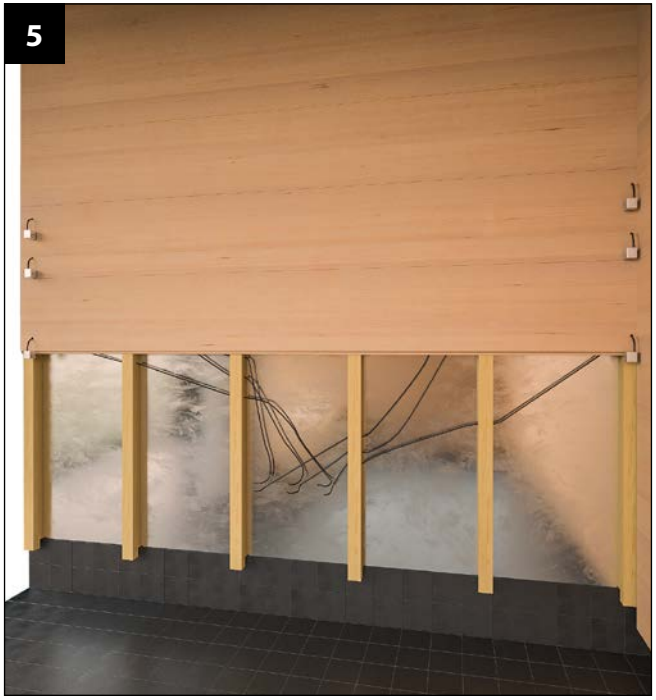
5

6

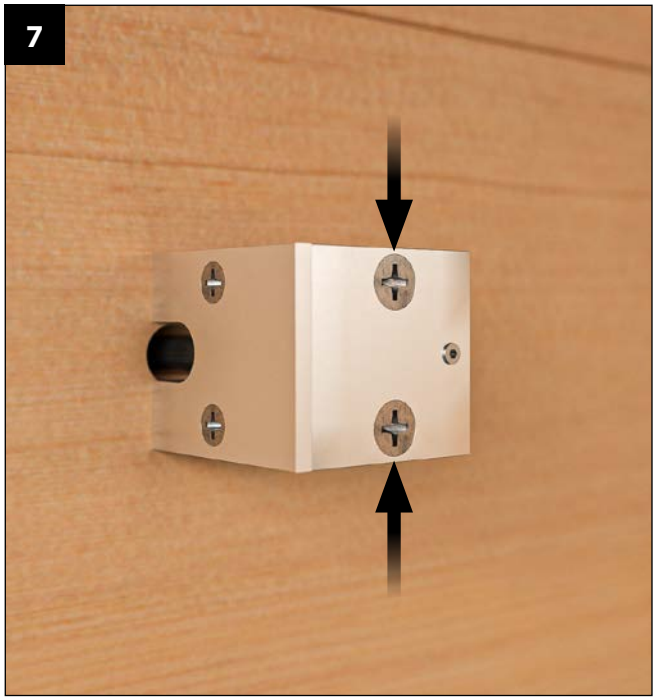
7

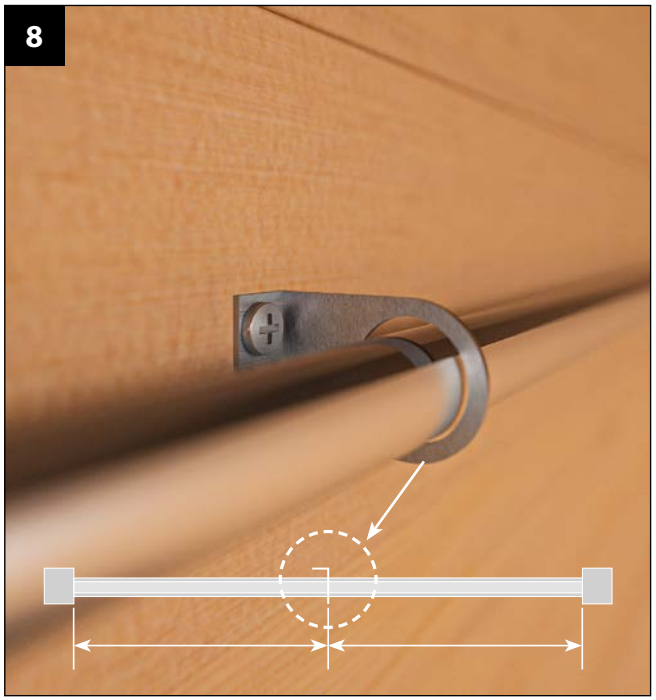
8

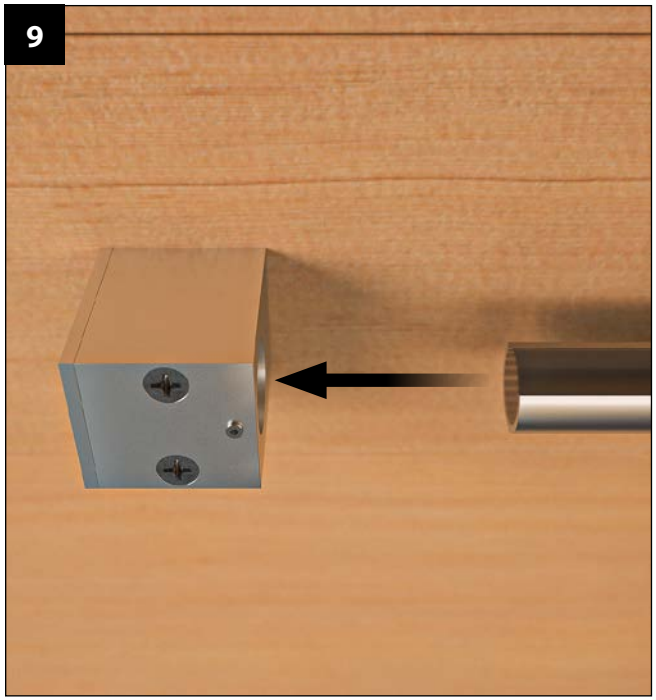
9

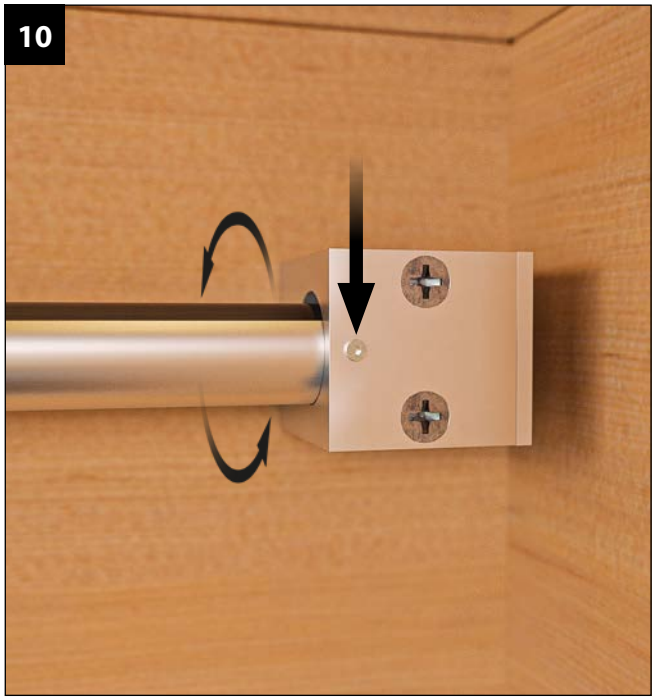
10

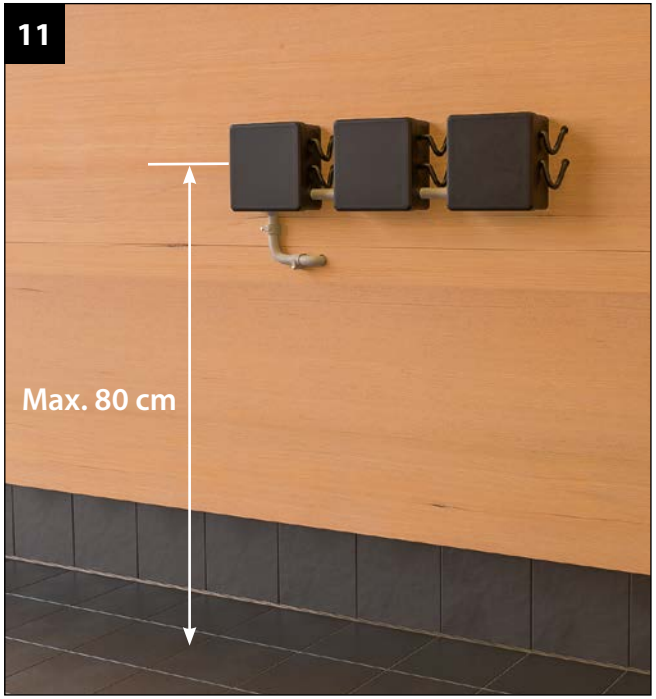
11
Max. 80 cm

12

1 Sauna Linear LED 1 m / Sauna Linear LED 2 m

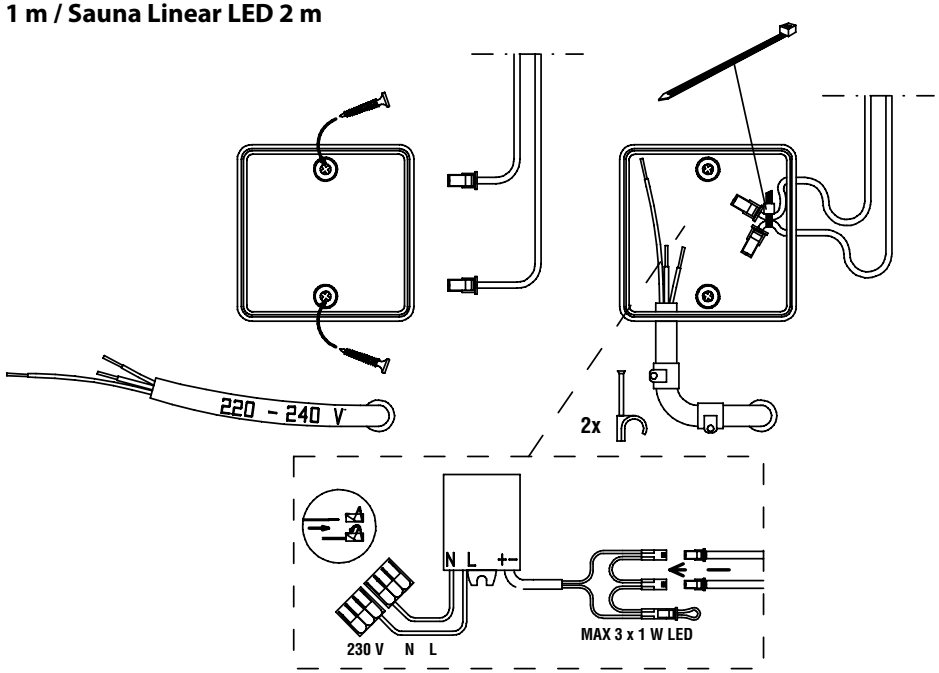

2 Sauna Linear LED 4 m + SPOT

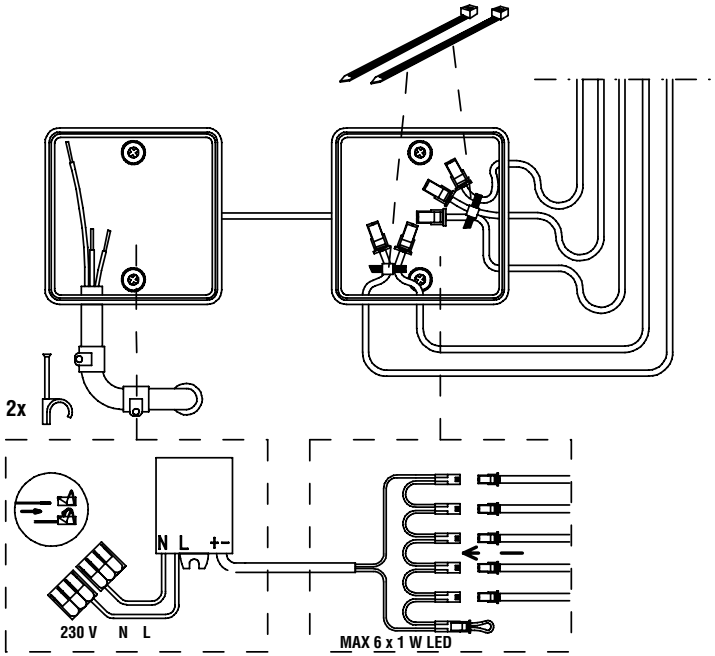

3

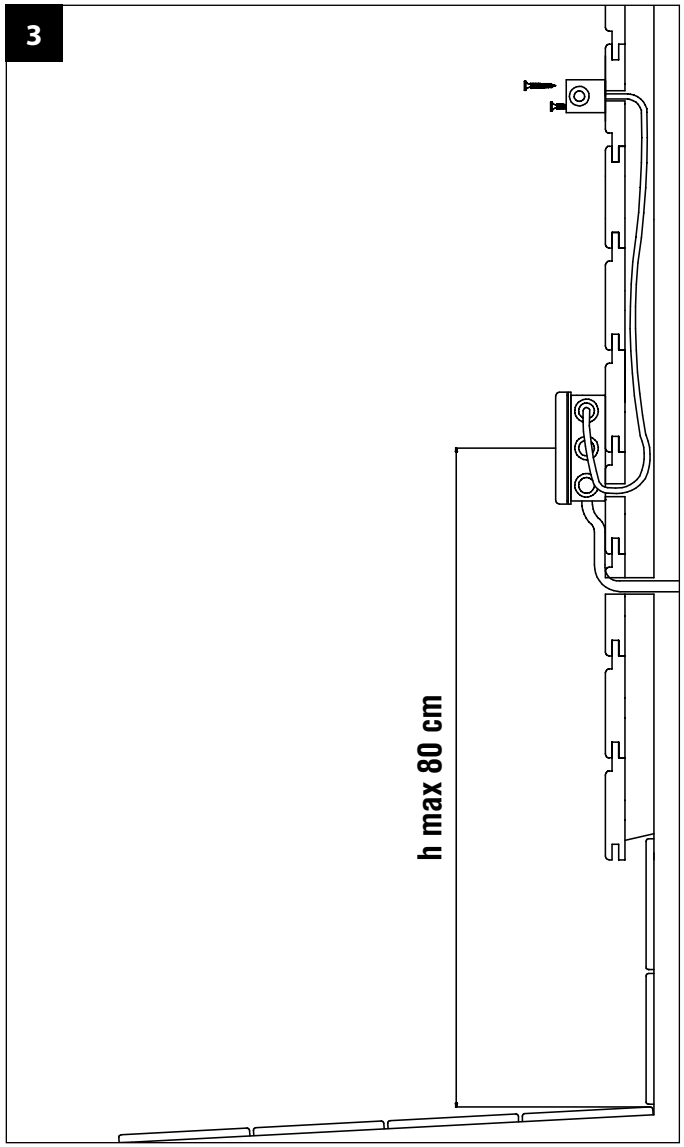

IP55

Subject to change.